GP Batteries DATA SHEET

Type	: Rechargeable Nickel Metal Hydride Cylindrical Cell
Nominal Dimension (with Sleeve)	: Φ = 11.65mm H = 29.5 mm
Applications	: Recommended discharge current 50 to 1500 mA
Nominal Voltage	: 1.2V
Capacity	: Nominal: 500 mAh Minimum: 500 mAh Typical: 520 mAh When discharged at 100 mA to 1.0V at 20℃
Charging Condition	: 50 mA for 16 hrs at 20℃
Fast Charge	: 250 mA to 500 mA (0.5 to 1C) charge termination control recommended control parameters: -ΔV : 0-5mV **DT/dt : 0.8℃/min (0.5 to 0.9C) 0.8 - 1℃/min (1C) **TCO : 45 - 50℃ **Timer : 105% nominal input ** for ref. only
Service Life	: >500 cycles (IEC standard)
Continuous Overcharge	: 50 mA maximum current for 1 year. No conspicuous deformation and/or leakage
Weight	: 9.8g
Internal Resistance	: Average 80mΩ upon fully charged (Range 75– 86 mΩ)at 1000Hz
Max. Charging Voltage	: 1.5V at 50 mA charging
Ambient Temperature Range	: Standard Charge : 0 to 45℃ Fast Charging : 10 to 45℃ Discharge : -20 to 50℃ Storage : -20 to 35℃

Model No.: GP50NH

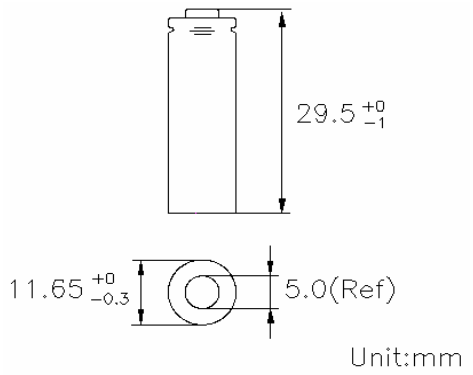

Low Rate Discharge

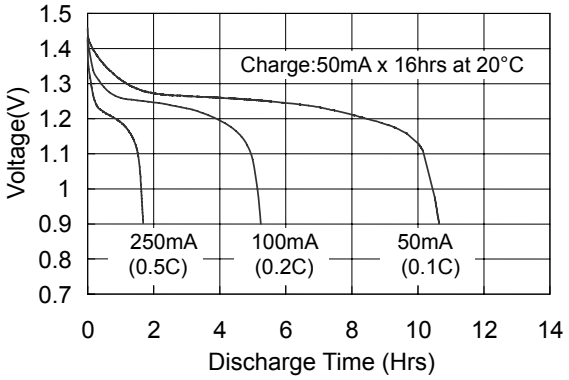

High Rate Discharge

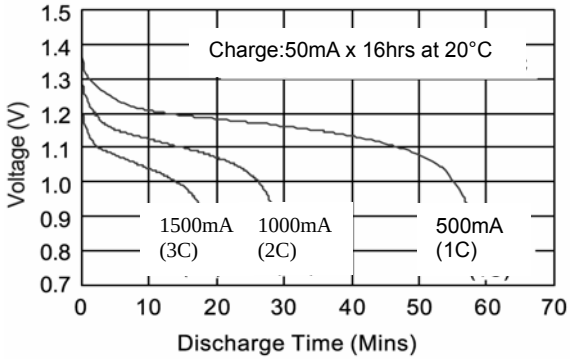

Fast Charge (Charge control required)

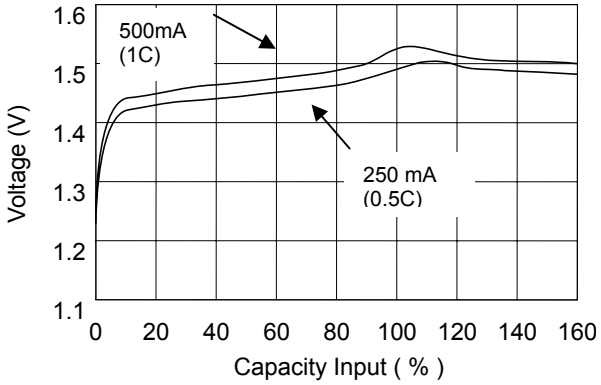

The information (subject to change without prior notice) contained in this document is for reference only and should not be used as a basis for product guarantee or warranty. For applications other than those described here, please consult your nearest GP Sales and Marketing Office or Distributors.

Manufacturer reserves the right to alter or amend the design, model and specification without prior notice.
Copyright@GPI International Ltd. – All rights reserved

Member Gold Peak Group